MALE END VIEW	FEMALE END VIEW

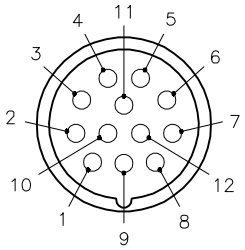

1 = WHT/BLK
2 = BLK/WHT
3 = WHT/GRN
4 = GRN/WHT
5 = WHT/RED
6 = RED/WHT
7 = WHT/ORG
8 = ORG/WHT
9 = N/C
10 = N/C
11 = DRAIN
12 = GRN/YEL

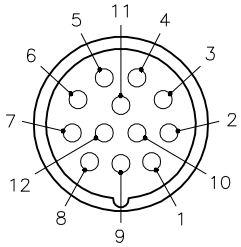

M23 connector

M23 connector

WIRING DIAGRAM

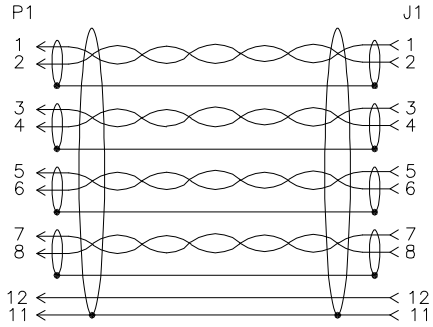

SPECIFICATIONS

CONTACT CARRIER MATERIAL	NYLON or PBT
MOLDED HEAD MATERIAL/COLOR	TPU/BLACK
CONTACT MATERIAL/PLATING	BRASS/GOLD
COUPLING NUT MATERIAL/PLATING	BRASS/NICKEL
RATED CURRENT [A]	3.0 A
RATED VOLTAGE [V]	300 V
OUTER JACKET MATERIAL/COLOR	PVC/BLUE
CONDUCTOR INSULATION MATERIAL	PVC
NUMBER OF CONDUCTORS [AWG]	8x22 AWG, 1x18 AWG GROUND
DRAIN/SHIELD	4X24, 1X22 AWG/ALUMINUM–POLYESTER FOIL
TEMPERATURE RATING	–40˚C to +105˚C (–40˚F to +221˚F)
PROTECTION CLASS	MEETS IEC IP67
CONDUCTOR ARRANGEMENT	4 SHIELDED TWISTED PAIR W/DRAIN, 1 GND, 1 DRAIN
CABLE RATINGS	UL: ITC/PLTC/AWM, 105C, 300 V CSA: CMX–OUTDOOR–CMG/AWM, 105C, 300 V

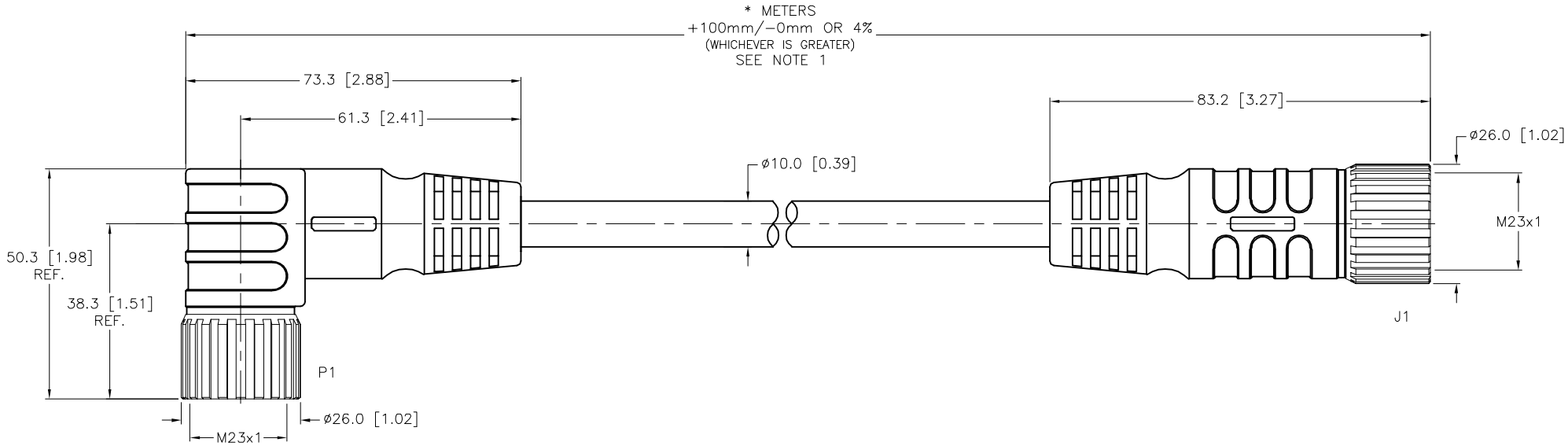

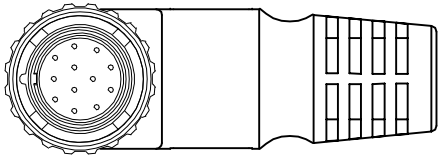

SOURCE DRAWING - FOR REFERENCE ONLY

NOTES:

1. "*" INDICATES CABLE LENGTH IN METERS. CONTACT TURCK TO ORDER SPECIFIC LENGTHS.

REV	DESCRIPTION	BY	DATE	ECO NO.
B	UPDATED DRAIN SPECS PER ECO	TV	03/02/16	53780

RELATED DOCUMENTS
1.
2.
3.
4.

3RD ANGLE PROJECTION

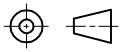

THIS DRAWING IS CONFIDENTIAL AND THE PROPERTY OF TURCK INC. USE OF THIS DOCUMENT WITHOUT WRITTEN PERMISSION IS PROHIBITED.

TURCK
3000 CAMPUS DRIVE
MINNEAPOLIS, MN 55441
1–800–544–7769
(763) 553–7300
(763) 553–0708 fax
www.turck.us

MATERIAL: SEE SPECIFICATIONS

FINISH: SEE SPECIFICATIONS

ALL DIMENSIONS DISPLAYED ON THIS DRAWING ARE FOR REFERENCE ONLY

CONTACT TURCK FOR MORE INFORMATION

DRFT: RDS | DATE: 05/12/14
APVD: T.S. | SCALE: 1=1.3

UNIT OF MEASUREMENT
MILLIMETER [INCH]
DO NOT SCALE THIS DRAWING

DESCRIPTION: P–CSWM CKM 12–978–*

IDENTIFICATION NO.

REV: B

FILE: 777011542

SHEET 1 OF 1